Stiles

Steel Door + Window Systems

Stiles Custom Metal Inc
1885 Kinser Road
Ceres CA USA 95307
T 209 / 538-3667 F 209 / 538-2776

www.stilesdoor.com

Email | Print / FAX

RHR Double Egress Frame - Steel

COMPANY | CONTACT | RFQ / PO#

TEL | FAX | EMAIL | JOB NAME

SHIP ADDRESS | CITY | STATE CA | ZIP

LEAD TIME | ◯ QUOTATION ◯ ORDER | PAGE | OF

Hinge measurements are from bottom of frame head.

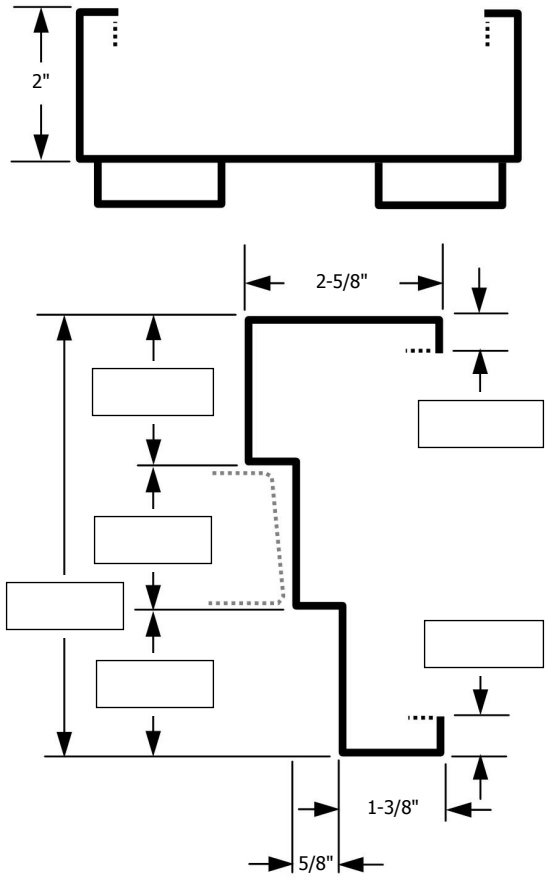

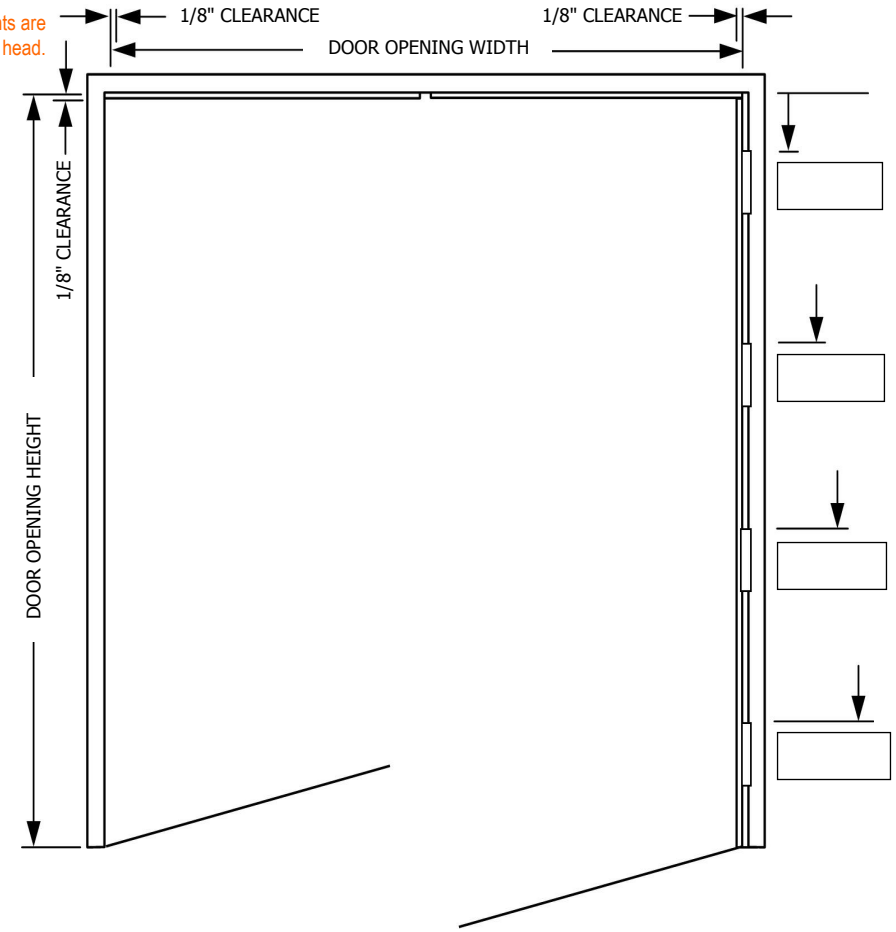

◯ SCHEDULE ATTACHED ◯ BLUEPRINTS ATTACHED

FRAME DATA:

OPENING NO.	QTY	HAND [A]	DOOR OPENING [B] WIDTH (IN)	DOOR OPENING [B] HEIGHT (IN)	WALL ANCHOR [C]	FIRE LABEL

[A] See handing chart, online TECH DATA section, or print catalog p. TD-2.0 (RH, LH, LHR, etc.)
[B] Door opening width measured from jamb rabbet to jamb rabbet.
Door opening height measured from bottom of frame to head rabbet.
[C] Anchors: See online FRAMES section (ANCHORS), or print catalog p. F-11.0 - F-11.2
NOTE: All doors & frames are reinforced for closers
NOTE: All frames receive T6 floor anchors except KDPL

rev. 0111

FRAMES:

CONSTRUCTION

MATERIAL

GAUGE | ◯ NO SILENCERS

FINISHING:

FINISH

HARDWARE:

LOCATIONS

HINGE SIZE / MFGR. & PART #

◯ EXTRA HEAVY

OTHER HINGE BACKSET

STD Hinge Backset on Frames = 11/32"

LOCK - EXIT DEVICE / MFGR. & PART #

◯ 2-3/4" STRIKE ◯ 4-7/8" STRIKE

FLUSH BOLTS / MFGR. & PART #

OTHER / INSTRUCTIONS: