Stiles

Steel Door + Window Systems

Stiles Custom Metal Inc
1885 Kinser Road
Ceres CA USA 95307
T 209 / 538-3667 F 209 / 538-2776
www.stilesdoor.com

Email | Print / FAX

Single Door & Frame - Steel

COMPANY | CONTACT | RFQ / PO#

TEL | FAX | EMAIL | JOB NAME

SHIP ADDRESS | CITY | STATE CA | ZIP

LEAD TIME | ◯ QUOTATION ◯ ORDER | PAGE | OF

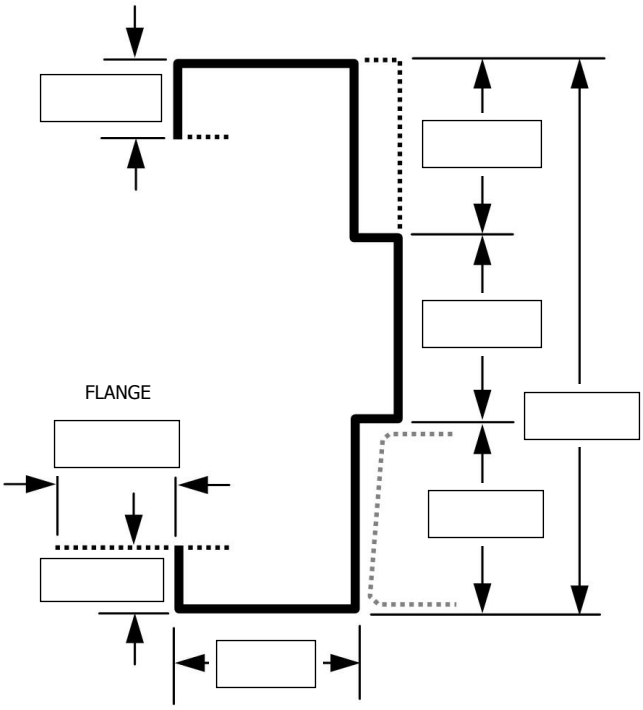

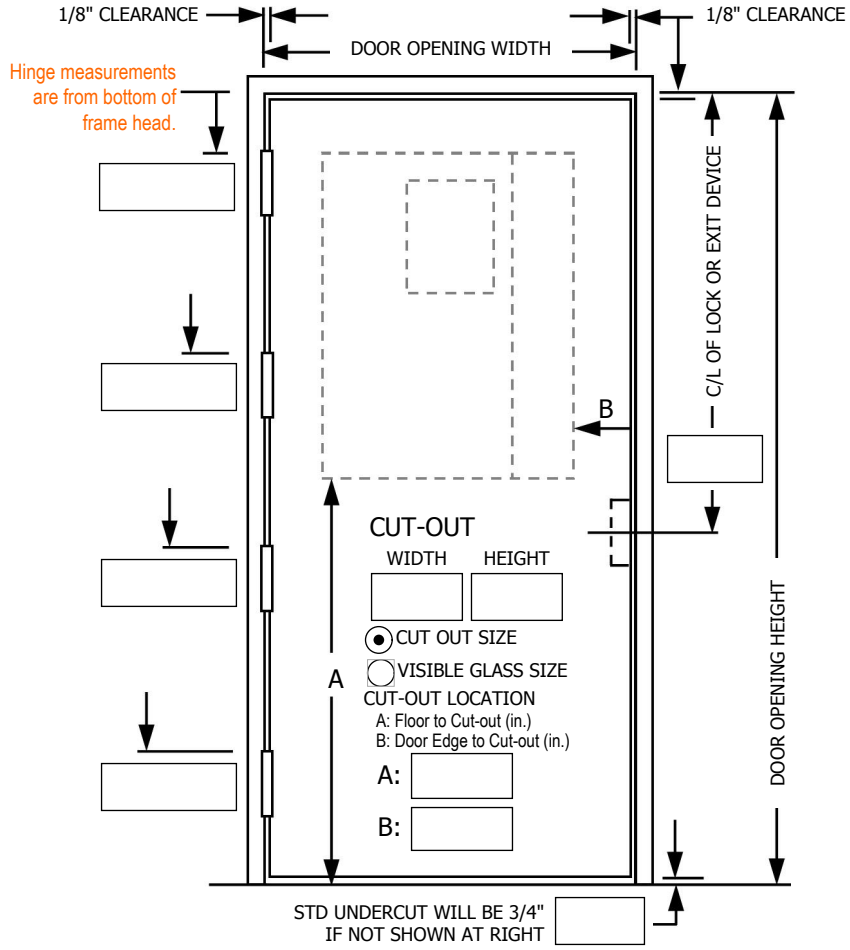

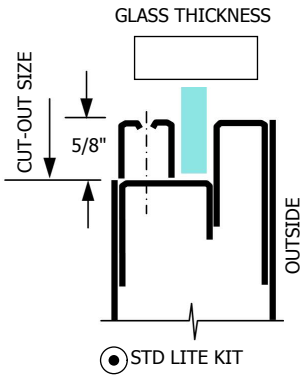

◉ STD LITE KIT

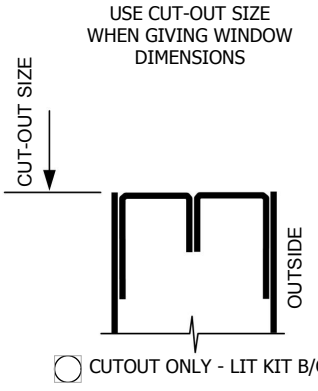

◯ CUTOUT ONLY - LIT KIT B/O

◯ SCHEDULE ATTACHED ◯ BLUEPRINTS ATTACHED

DOOR + FRAME DATA:

OPENING NO.	QTY	HAND [A]	DOOR OPENING [B] WIDTH (IN)	DOOR OPENING [B] HEIGHT (IN)	WALL ANCHOR [C]	FIRE LABEL

[A] See handing chart, online TECH DATA section, or print catalog p. TD-2.0 (RH, LH, LHR, etc.)
[B] Door opening width measured from jamb rabbet to jamb rabbet.
Door opening height measured from bottom of frame to head rabbet.
[C] Anchors: See online catalog FRAMES section (ANCHORS), or print catalog p. F-11.0 - F-11.2
NOTE: All frames receive T6 floor anchors except KDPL
NOTE: All doors & frames are reinforced for closers

rev. 0311

DOORS:

ELEVATION (See Catalog)

CORE

MATERIAL

GAUGE

EDGE

◯ CLOSE TOP OF DOOR
◯ CLOSE DOOR BOTTOM
◯ WATERTIGHT

FRAMES:

CONSTRUCTION

MATERIAL

GAUGE | ◯ NO SILENCERS

HARDWARE:

LOCATIONS

HINGE SIZE / MFGR. & PART #

◯ EXTRA HEAVY

OTHER HINGE BACKSET

(NOTE:STD Hinge Backset on Frames = 11/32")

LOCK - EXIT DEVICE / MFGR. & PART #

◯ 2-3/4" STRIKE ◯ 4-7/8" STRIKE

FINISHING:

FINISH

OTHER / INSTRUCTIONS: